Vol. 5(17) Oct. 2015, PP. 2416-2423

Contents list available at IJMEC

International Journal of Mechatronics, Electrical and Computer Technology (IJMEC)

Journal Homepage: www.aeuso.org

PISSN: 2411-6173 - EISSN: 2305-0543

Fuzzy Based Analysis of Inverter Fed Micro Grid in Islanding Operation

Yuvaraja Teekaraman[1] and Gopinath Mani[2]

[1]*Research Scholar, Department of EEE, Meenakshi Academy of Higher Education & Research, Chennai City, India*

[2]*Professor, Department of EEE, Dr. NGP Institute of Technology, Coimbatore City, India*

***Corresponding Author's E-mail:** yuvarajastr@gmail.com

Abstract

In general islanding operation referred as isolation part of power system including distributed generation. This paper presents fuzzy logic controller for inverter fed micro-grid in islanding operation. Power electronics supports well by providing the control and flexibility required for the micro grid concept. Correctly designed controller insures that the micro grid can meet its utility's needs. The efficiency and robust is counted in the design of fuzzy system. The simulation is done using MATLAB SIMULINK. The simulation results show very good consistency and show significance for the control of inverters in micro grid.

Keywords: inverter, islanding operation, Micro grids, voltage control

1. Introduction

Nowadays, the utility of micro grid can be treated of as a controlled cell of the power system. For this a small example, the cell could be controlled as a single dispatch able load, which can respond few seconds to meet the needs of the transmission system. On the customer side the micro grid can be designed to meet the special needs. Some of them are enhance the local reliability, reduced feeder loss, support of local voltages, provide increased efficiency through used waste heat, voltage sag correction or provide uninterruptible power supply functions. Today distributed generation is becoming more popular power scenario in a de-regulated environment. Integration of both distributed generation and incorporation of controllers lead to conventional power network to operate as an active power networks. Under this disturbance the power network split into a part contain generators and loads. The load demand can be matched with the supply power of island. For a commercial and industrial sensitive load the need of power quality and reliability is high. A micro grid can be DC grid system or else an AC system, even better a high frequency AC grid system. A Micro grid system is operated as islanded. The basic issue to be considered for distributed generation is the technical problem related to control of a significant number of micro sources. The basic fundamental problem with a complex control system is that a failure of a control component or a software error which will bring the system down. In the literature analysis both PV and wind power simultaneously or individually maintain a regulated output voltage [1]-[3]. For various applications interfacing of PV panel and the battery in satellite platform power systems [4], from the various topology point of view the multi input converters is based on buck, boost, and buck boost used in [5]-[6]. The Multiport converters are constructed out of hybrid fuel cell, battery systems and hybrid ultra-capacitor systems [7]-[9]. The integrated topology which is suitable for various renewable energy harvesting applications is discussed in [10].In this paper, a fuzzy controller was implemented

Article History:

Received Date: Jun. 14, 2015
Accepted Date: Sep. 09, 2015
Available Online: Sep. 11, 2015

with inverter fed micro grid in islanding operation and compared with the conventional controller. The simulation results of Fuzzy controller are presented using Matlab/Simulink. This paper uses a reference frame, which is instantaneously synchronized to the micro grid bus voltage, to develop a dynamic model of an islanded micro grid. Here in the Section II of the paper presents the system basic structure while Section III proposes a supervisory control scheme to regulate the voltage and frequency of the micro grid. Section IV concludes the simulation results of an islanded micro grid based on instantaneous synchronization. It also includes the control design procedure.

2. Power Network in Islanded Mode

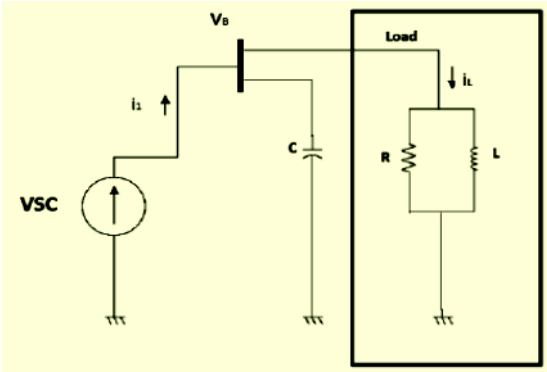

Fig. 1: Converter based Power Network in islanded mode

The Fig.1 implies the configuration of a simplified micro grid. The system consists of a collector bus, a converter, a bus capacitor C and a load. This load is represented as a parallel combination of resistance R and inductance L and the load is assumed to be imbalanced condition. With all these assumptions, a fundamental frequency model of the converter is justified, where the converter is modeled as an average current source. From Fig.1. The linearized model can be written in standard dynamics equation and can be derived by

2.1. Voltage Equation

$$\mathrm{V_B} = \frac{1}{\mathrm{C_B}} \int \mathrm{idt} \tag{1}$$

$$V_B = \frac{1}{C_B} \int (i_1 - i_B - i_L)\, dt \tag{2}$$

$$\frac{dv_B}{dt} = \frac{i_1}{C_B} - \frac{i_B}{C_B} - \frac{i_L}{C_B} \tag{3}$$

$$\frac{dv_B}{dt} = \frac{i_1}{C_B} - \frac{V_B}{RC_B} - \frac{i_L}{C_B} \tag{4}$$

$$\frac{dv_B}{dt} = \frac{i_1}{C_B} - \frac{V_B}{RC_B} - \frac{i_L}{C_B} \tag{5}$$

$$\frac{\mathrm{dv_{B_{abc}}}}{\mathrm{dt}} = -\frac{\mathrm{V_{B_{abc}}}}{\mathrm{RC_B}} - \frac{\mathrm{i_{Labc}}}{\mathrm{C_B}} + \frac{\mathrm{i_{1abc}}}{\mathrm{C_B}} \tag{6}$$

2.2. Current Equation

$$\frac{\mathrm{di_{L_{abc}}}}{\mathrm{dt}} = \frac{\mathrm{V_{B_{abc}}}}{\mathrm{L}} \tag{7}$$

The above voltage and current equations can be rewritten in terms of the d and q axis components of the voltage and current space vector sin a certain reference frame B. If B rotates with angular frequency ω_B, the resulting equations are:

$$\frac{dv_{B_d}}{dt} = -\frac{V_{B_d}}{RC_B} + \omega_B V_{Bq} - \frac{i_{Ld}}{C_B} + \frac{i_{1d}}{C_B} \quad (8)$$

$$\frac{dv_{B_q}}{dt} = -\frac{V_{B_q}}{RC_B} + \omega_B V_{Bd} - \frac{i_{Lq}}{C_B} + \frac{i_{1q}}{C_B} \quad (9)$$

$$\frac{di_{L_d}}{dt} = \omega_B i_{Lq} + \frac{V_{B_d}}{L} \quad (10)$$

$$\frac{di_{L_q}}{dt} = -\omega_B i_{Ld} + \frac{V_{B_q}}{L} \quad (11)$$

Where:

V_{B_d} and V_{B_q} are the d and q axis components of V_B;
i_{Ld} and i_{Lq} are the d and q axis components of i_L;
i_{1d} and i_{1q} are the d and q axis components of i_1;

$$\omega_B \triangleq \frac{d_{\theta B}}{dt} \quad (12)$$

Setting V_{bq}=0.in (8) and (9) and substituting (12) in(10) and (11) results in the nonlinear state space model of the system.

2.3. State Equation

$$\frac{dv_{B_d}}{dt} = -\frac{V_{B_d}}{RC_B} - \frac{i_{Ld}}{C_B} + \frac{i_{1d}}{C_B} \quad (13)$$

$$\frac{di_{L_d}}{dt} = \frac{i_{1q}-i_{Lq}}{C_B V_{Bd}} i_{Lq} + \frac{V_{B_d}}{L} \quad (14)$$

$$\frac{di_{L_q}}{dt} = -\frac{i_{1q}-i_{Lq}}{C_B V_{Bd}} i_{Ld} \quad (15)$$

2.4 Output Equation

$$|V_{Bd}| = V_{Bd} \quad (16)$$

$$\omega_B = \frac{i_{1q}-i_{Lq}}{C_B V_{Bd}} \quad (17)$$

The output power of DG is passed through a controller.

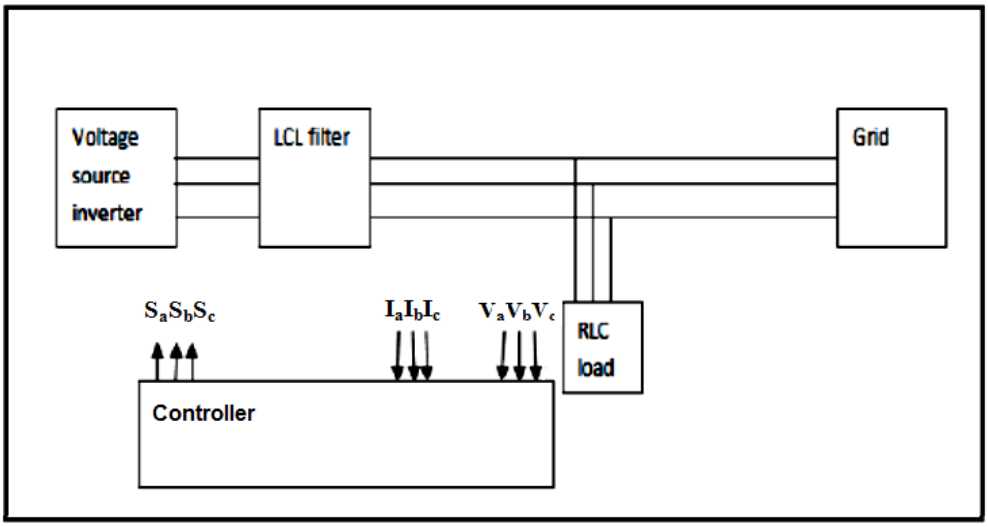

Fig.2: Inverter fed Micro grid

The Fig.02, shows the converter fed microgrid. It consists of a dc source, LCL filter and RLC load which is modeled and analyzed in MATLAB/Simulink. The dc source voltage is 400V. Fig.03 shows the grid voltage across the island mode.

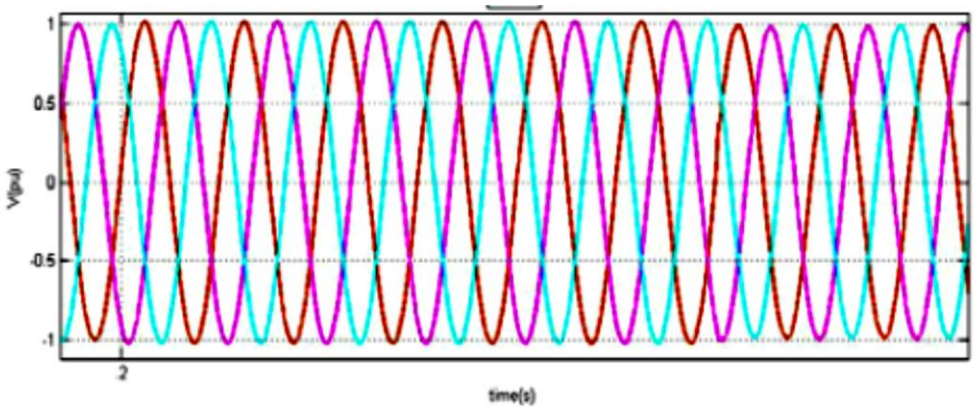

Fig. 3: Grid Voltage

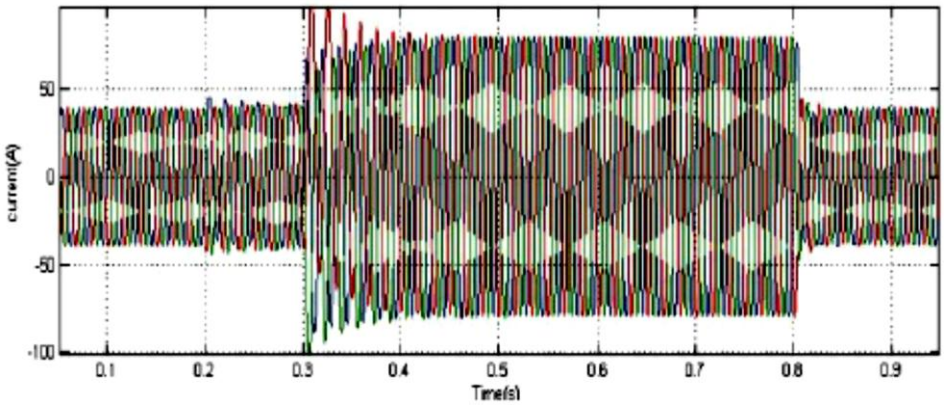

Fig. 4: Inverter current

After the synchronization, inverter current increases to 80A. At the time 0.8 sec the DG detects the islanding condition and the control mode changes .From 0.8 sec onwards the current is decreased which indicates the disconnection from grid. This is implies from the Fig.04. Fig.05 shows the active and reactive power after which it is disconnect DG from the grid. At 0.2 sec the DG is connected to grid and after synchronization the total active power delivered by the DG becomes 20kW. At 0.8 sec the DG detects the islanding condition and goes to islanding mode so that the active power delivered is decreased to 10kW.

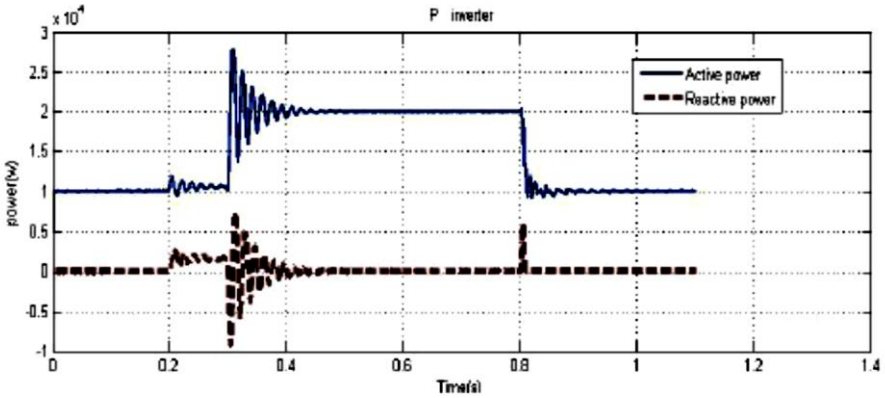

Fig. 5: Active and Reactive power

3. Proposed Fuzzy-Pi Controller

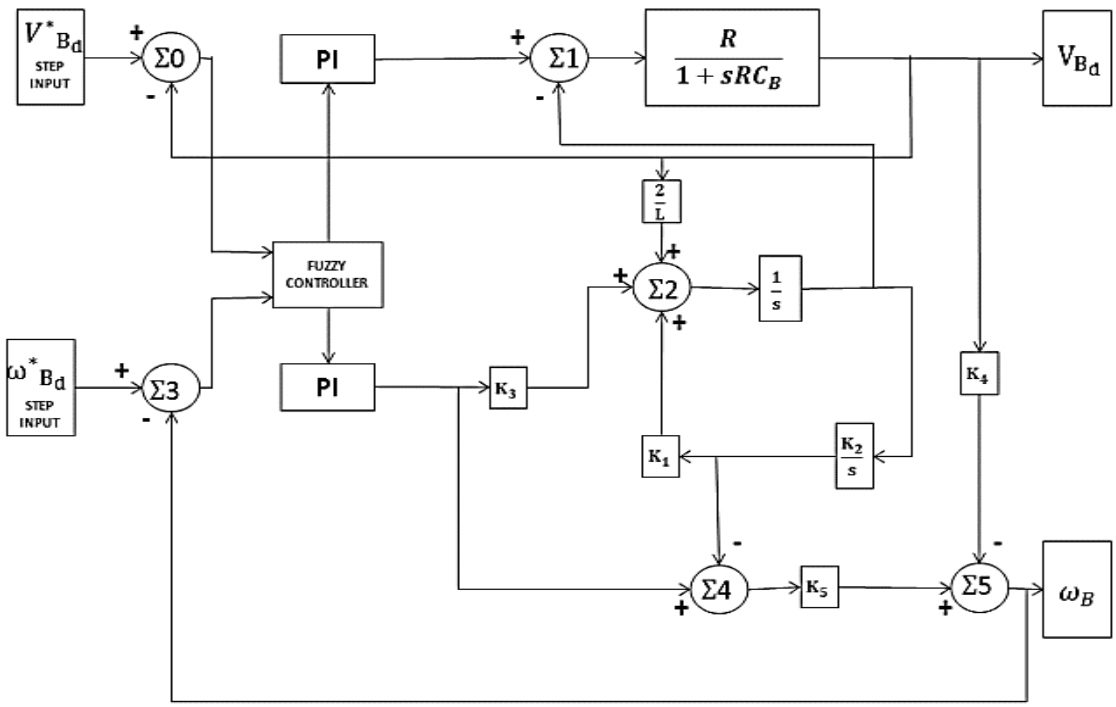

Fig. 6: Fuzzy based controller

In this control system, fuzzy control algorithm is used to evaluate the fuzzification and defuzzification process in MATLAB- tool box. The Fig. 6, shows the fuzzy control system. By introducing the fuzzy technology, the voltage and frequency can be controlled with a single controller. The error signals from voltage and the frequency block is given to fuzzy controller to gain error. The fuzzy rule table is shown below.

Table 1: Fuzzy rules for controller.

ec / Δk_p / e	NB	NM	NS	ZO	PS	PM	PB
NB	PB	PB	PM	PM	PS	ZO	ZO
NM	PB	PB	PM	PS	PS	ZO	NS
NS	PM	PM	PM	PS	ZO	NS	NS
ZO	PM	PM	PS	ZO	NS	NM	NM
PS	PS	PS	ZO	NS	NS	NM	NM
PM	PS	ZO	NS	NM	NM	NM	NB
PB	ZO	ZO	NM	NM	NM	NB	NB

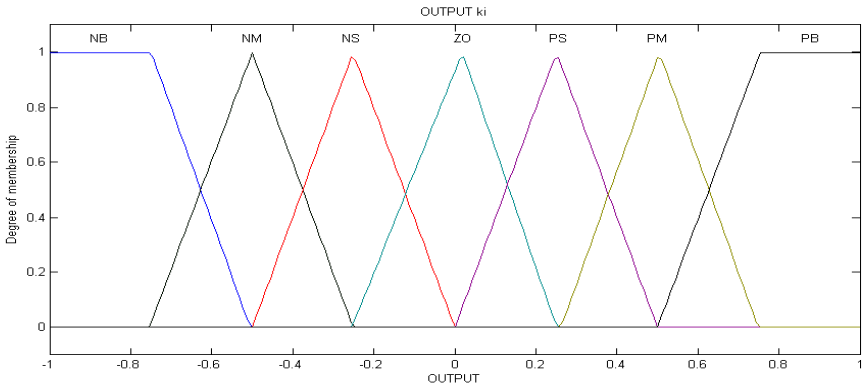

Fig.7: Fuzzy input variable.

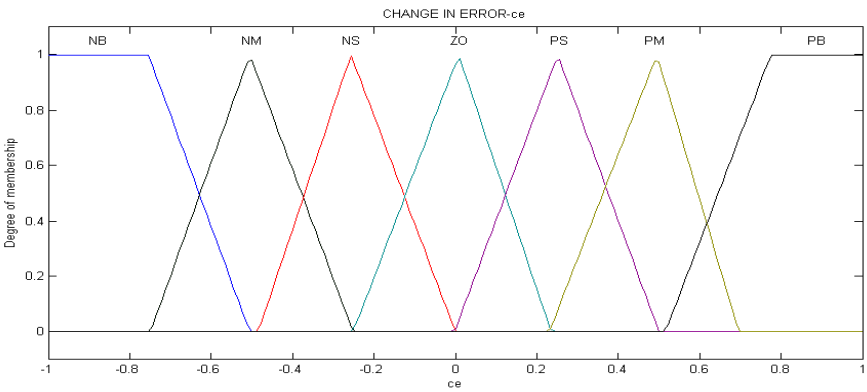

Fig. 8: Fuzzy Output variable.

Membership Functions (MFs) are in 'trimf' types, here totally seven MFs created. They are namely 'zero, very low, low, normal1, normal2, high, very high. The Fuzzy membership function for input and output is analyzed shown clear in the Fig.07 & Fig.08.

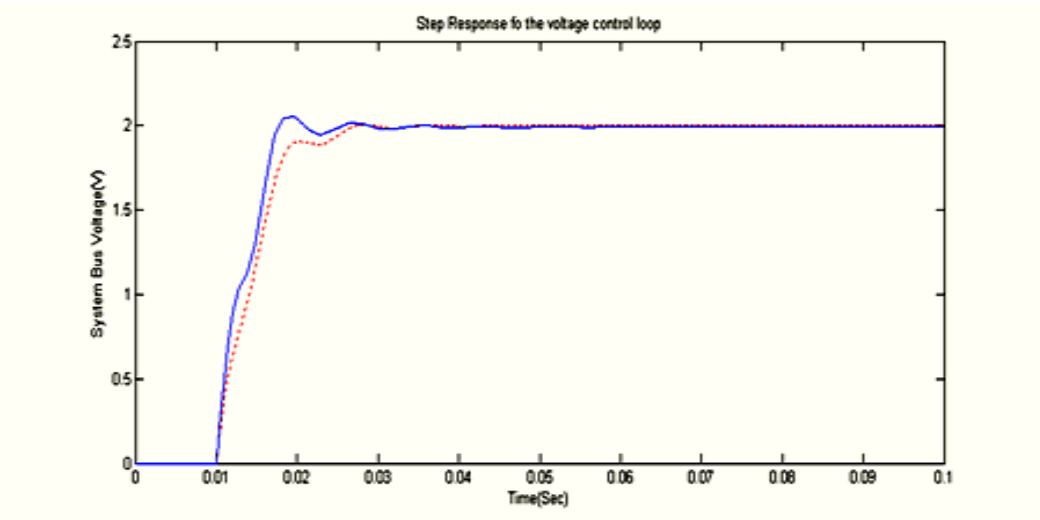

Fig. 9: Comparing Fuzzy and PI output for voltage control 'RL' load

From the Fig.9. whichshows that for the normal R-L load, the voltage step response has a rise time of 11 ms for a PI Controller. But for the same load, the voltage step response has a rise time reduced to 8 ms and is well damped with 10% overshoot in fuzzy controller.

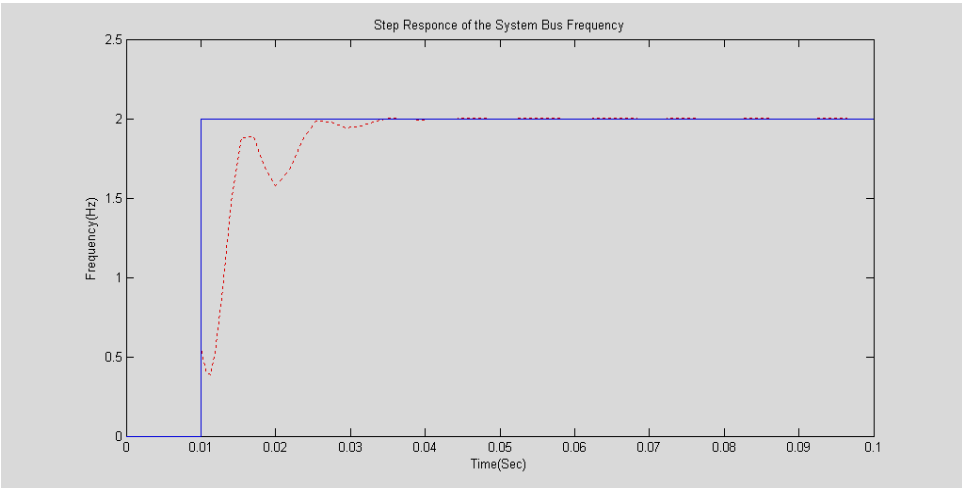

Fig. 10: Comparing Fuzzy and PI output for Frequency control 'RL' load

From the Fig.10. For a normal R-L load, the frequency step response has a rise time of 14 ms and a settling time of 28 ms in PI Controller. But for the same load, the voltage step response has a rise time reduced to 8 ms and is well damped with negligible overshoot in fuzzy controller. But for the same load, the frequency step response has risen and settles down immediately at the point in fuzzy controller.

Conclusion

Distributed generation units can be connected to the grid via power electronics converters which can be operated in islanded mode. A Fuzzy model of an islanded microgrid is formulated in a reference frame that is instantaneously synchronized to the collector bus voltage. Simulation results demonstrate validity of the model and robustness of the proposed control scheme to changes in system loading and power factor. Simulation results show the method is successful in voltage and frequency control with varying network parameters.

References

[1] Andreotti, A. Del Pizzo, R. Rizzo, P. Tricoli, *An efficient architecture of a PV plant for ancillary service supplying,* SPEEDAM 2010 Intern. Symposium on Power Electronics, Electrical Drives, Automation and Motion, Pisa (Italy), 678-682, June 2010.

[2] Batarseh, Z. Qian, O. Abdel-Rahman, *An Integrated Four-Port DC/DC Converter for Renewable Energy Applications*, IEEE Trans. Power Electron., 5 (7), 1877 – 1887, 2010.

[3] Chiang, T.T. Ma, Y.H. Cheng, J.M. Chang, W.N Chiang, *Design and implementation of a hybrid regenerative power system combining grid-tie and uninterruptible power supply functions*, IET Renewable Power Generation, 4 (1), 85-89, 2009.

[4] Chen, Y. C. Liu, and F. Y. Wu, *Multi-input DC/DC converter based on the multi winding transformer for renewable energy applications,* IEEE Transactions Industrial. Appl., 38 (4), 1096–1104, 2002.

[5] Duarte, M. Hendrix, and M. G. Simoes, *Three-port bidirectional converter for hybrid fuel cell systems*, IEEE Trans. Power Electron., 22 (2), 480–487, 2007.

[6] Jiang and B. Fahimi, Multi-*port power electric interface for renewable energy sources,* IEEE APEC2009Conference, Washington DC USA, 347–352, Feb. 2009.

[7] Matsuo, W.Lin, F. Kurokawa, T. Shigemizu, and N.Watanabe, *Characteristics of the multiple-input DC–DC converter,* IEEE Transactions on Industrial Appl., 51 (3), 625–631, 2004.

[8] Peng, H. Li, G. J. Su, and J. S. Lawler, *A new ZVS bidirectional DC-DC converter for fuel cell and battery applications,* IEEE Transactions on Power Electron., 19 (1), 54–65, 2004.

[9] Qian, O. Abdel-Rahman, J. Reese, H. Al-Atrash, I. Batarseh, *Dynamic analysis of three-port DC/DC converter for space applications*, IEEE APEC2009 Conference, Washington DC USA, 28–34, 2004.

[10] R. Rizzo, *Design of a high efficiency-low cost double level boost converter*, Journal of Electrical Systems, submitted for publication, 2012.

[11] Su, L. Tang, A *reduced-part, triple-voltage DC-DC converter for EV/HEV power management*, IEEE Transactionson.PowerElectron.2406–2410,