Vol. 7(25), Jul. 2017, PP. 3446-3453

Contents list available at IJMEC

International Journal of Mechatronics, Electrical and Computer Technology (IJMEC)

Journal Homepage: www.aeuso.org

PISSN: 2411-6173 - EISSN: 2305-0543

Improved Fuzzy Logic Control Strategy of Induction Machine based on Direct Torque Control

NOUR Mohamed* and TEDJINI Hamza

SGRE Laboratry - Tahri Mohamed University Bechar, ALGERIA

Phone Number: *+213-671045245*

****Corresponding Author's E-mail:*** *nour_enset@yahoo.fr*

Abstract

This paper presents an improved direct torque controlled (DTC) inducion motor drive based on fuzzy logic strategy. The goal of this study is to reduce ripples for both electromagnetic torque and stator flux caused by hysteresis comparators and sector changes in conventional DTC. In the proposed control scheme two fuzzy logic controllers are designed to replace the hysteresis comparators and generate the right module and angle of reference voltage vector, then a PWM strategy is used to deliver the inverter switching states. Simulation results shows the compared performances of fuzzy logic and classical DTC control.

Keywords: *Induction motor (IM), direct torque control (DTC), direct torque fuzzy control (DTFC), space vector modulation (SVM), fuzzy inference system (FIS).*

1. Introduction

The developement of power electronics made induction machines the major candidate of high performances motion and speed control applications. In recent years many control strategies has been developed to achieve the features of precise and quick torque response. The direct torque control technique (DTC) proposed by I. Takahashi [11] and M. Depenbrock [5] in the mid eighties has been recognised to be a practical solution to achieve these requirements [1]–[3], [5],[8]. However the main disadvantage of DTC controlled induction machine drives is the ripples of electromagnetic torque and stator flux. This is mainly caused by the use of hysteresis comparators, and switching table limitation that uses only eight combinations of the voltage vector. T This problem led to the research of improved strategies based on artificial intelligent controllers designed to replace the hysteresis comparators and the selection table in conventional DTC. The proposed direct torque fuzzy strategy suggests to replace the hysteresis comparators and the switching table with two fuzzy logic controllers that generates the module and the angle of the reference voltage vector in order to bring the flux stator and the torque electromagnetic to their references in an optimal way. The output variables thus obtained are used by a PWM vector to control the inverter switches. The most variable speed drives based on DTC schemes are controlled by a closed loop speed control, where the difference between desired and real speed values is introduced to a speed controller designed to generate the appropriate reference value of electromagnetic torque, then the stator flux reference is fixed to their nominal value.

Article History:
Received Date: Nov. 26, 2016
Accepted Date: Apr. 09, 2017
Available Online: Jun. 01, 2017

2. Direct torque control DTC principe

In the DTC scheme [1] (Figure 1), the electromagnetic torque and flux signals are delivered to two hysteresis comparators. The corresponding output variables and the stator flux position sector are used to select the right voltage vector from a switching table which generates pulses to control the power switches in the inverter [1].

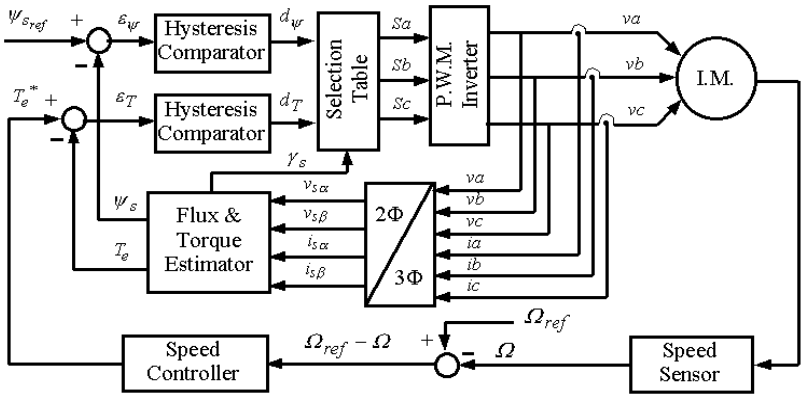

Figure 1: Conventional Direct Torque Control Scheme

2.1. Inverter voltage vector

The voltage vector V_s is delivered by a three-phase inverter controlled with six power switches. Its can be expressed by three Boolean states $S_j(j=a,b,c)$. Where: S_j=1 : top switch is closed and down switch down is opened, then S_j=0 : top switch is opened and down switch is closed. Using this three Boolean variables and dc voltage E, the output voltage vector can be calculated as follows:

$$V_s = \sqrt{\frac{2}{3}} E\left[S_a + S_b e^{j2\pi/3} + S_c e^{j4\pi/3}\right] \quad (1)$$

The combinations of the three variables (Sa Sb Sc) can generate eight possible positions of voltage vector V_s (figure 2) [4], [6].

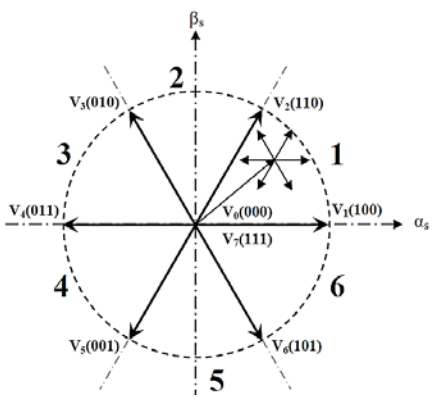

Figure 2: elaboration of voltage vector *Vs* (*Sa, Sb, Sc)*

2.2. Stator flux control

From the model of the induction machine in a stator reference frame, the stator flux is estimated from the relationship:

$$\emptyset_s = \int (V_s - R_s i_s)\, dt \quad (2)$$

On a short time interval [T_k, T_{k-1}], corresponding to a sampling period T_e, (Sa Sb Sc) are fixed, and if we consider the term of the ohmic voltage drop $R_s.i_s$ to be negligible relative to the voltage Vs, we can write :

$$\emptyset_s(T_{k+1}) = \emptyset_s(T_k) + V_s.T_e \quad (3)$$

$$\Delta\emptyset_s = \emptyset_s(T_{k+1}) - \emptyset_s(T_k) = V_s.T_e \quad (4)$$

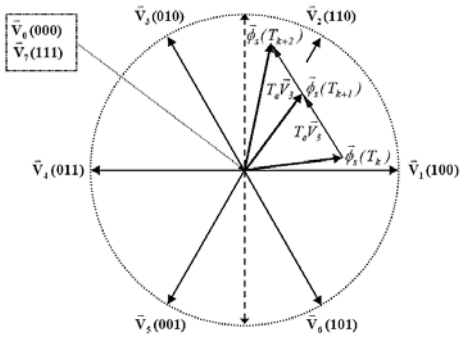

Figure 3: Stator flux evolution example

2.2. Electromagnetic torque flux control

The principle of the conventional DTC is to control directly the electromagnetic torque while maintaining constant stator flux amplitude. The command value of the torque will be directly controlled by the angle between both stator and rotor fluxes vectors as shown by equation (5)[6].

$$C_{em} = p\frac{M}{\sigma L_s L_r}\varphi_s.\varphi_r.\sin(\theta_{sr}) \quad (5)$$

Where θ_{sr} is the angle between the stator and rotor fluxes vectors. In order to keep the electromagnetic torque constant, the decrease of the rotor flux ϕ_r caused by the increase of the load must be compensated for by increasing the angle θ_{sr}.

2.3. Switching table elaboration

Through two hysteresis comparators, the differences between estimated and reference values of stator flux and electromagnetic torque results two Boolean output values wich are used with flux position vector to choose the proper voltage vector and consequently the inverter power switch states, that's indicated in a look-up table proposed by Takahashi.[6].

Table 1: DTC switching table.

N		1	2	3	4	5	6
$\Delta_{\emptyset_s}$	$\Delta_{T_{em}}$						
1	1	**V_2**	**V_3**	**V_4**	**V_5**	**V_6**	**V_1**
	0	**V_7**	**V_0**	**V_7**	**V_0**	**V_7**	**V_0**
0	1	**V_3**	**V_4**	**V_5**	**V_7**	**V_1**	**V_2**
	0	**V_0**	**V_7**	**V_0**	**V_7**	**V_0**	**V_7**

3. Direct torque Fuzzy control DTFC principe and modeling

Based on fuzzy logic theory the proposed DTFC (Figure 4)use fuzzy inference system controllers together with a space voltage modulator to replace both the hysteresis comparators and the switching table in conventional DTC.

The FIS controller is designed to evaluate the reference voltage required to drive the flux and torque to the demanded values within a fixed time period. This evaluation is performed using the electromagnetic torque and stator flux magnitude errors together with the stator flux angle. This calculated voltage is then synthesised using Space Vector Modulation (SVM) [1]- [6].

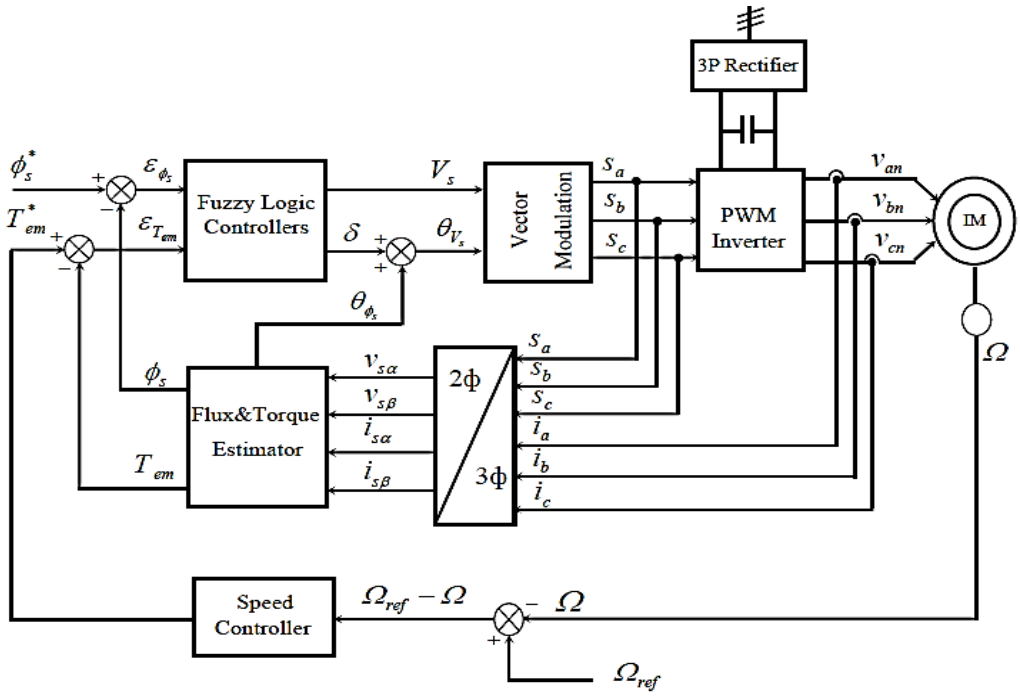

. **Figure 4:** Direct Torque fuzzy Control Scheme

In order to generate the desired reference voltage using the DTFC scheme, two FIS controllers acts on both amplitude and angle of the reference voltage components. The voltage increment angle is delivered by a Sugeno FIS controller, then the module is selected by a Mamdani one, the follows figures shows controllers structures and inputs outputs surface, then the matrix decision are defined in table 2 and table 3. The components of the desired reference voltage vector are added to each other and the result, is delivered to the space vector modulator which calculates the switching states Sa , Sb and Sc according to the well known algorithm [10], [7], [9].

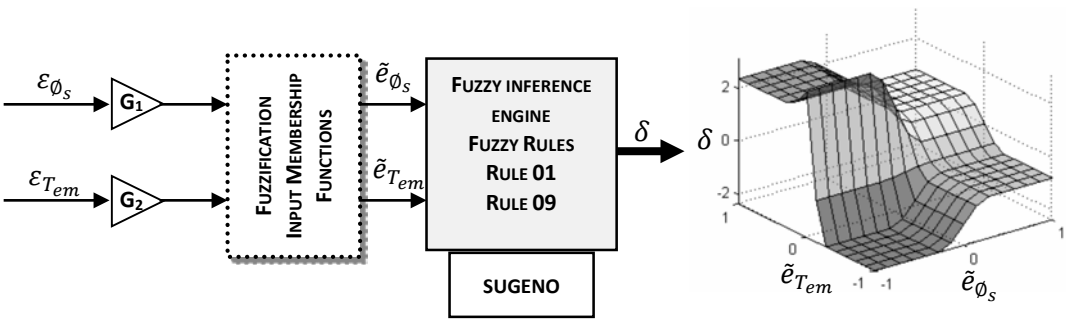

Figure 5: Structure of voltage increment angle SUGRNO FIS controller

Table 2: Angle increment matrix decision.

$\tilde{e}_{\phi_s}$	P			Z			N		
$\tilde{e}_{T_{em}}$	P	Z	N	P	Z	N	P	Z	N
δ	$+\frac{\pi}{4}$	0	$-\frac{\pi}{4}$	$+\frac{\pi}{2}$	$+\frac{\pi}{2}$	$-\frac{\pi}{2}$	$+\frac{3\pi}{4}$	$+\pi$	$-\frac{3\pi}{4}$

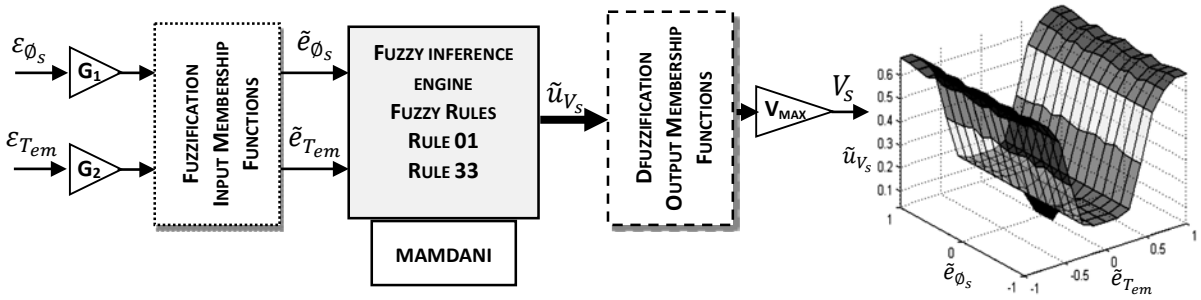

Figure 6: Structure of voltage module MAMDANI FIS controller

Table 3: voltage module matrix decision.

	$\tilde{e}_{T_{em}}$ / $\varepsilon_{\emptyset_s}$ \ $\tilde{u}_{V_s}$	NL	NM	NS	NZ	PS	PM	PL
NL: NEGATIVE LARGE	NL	**PL**	**PM**	**PS**	**PS**	**PS**	**PM**	**PL**
NM: NEGATIVE MEDIUM	NM	**PL**	**PM**	**PS**	**PS**	**PS**	**PM**	**PL**
NS: NEGATIVE SMALL	NS	**PL**	**PM**	**PS**	**NZ**	**PS**	**PM**	**PL**
NZ: Near Zero	NZ	**PL**	**PM**	**PS**	**NZ**	**PS**	**PM**	**PL**
PS: Positive Small	PS	**PL**	**PM**	**PS**	**NZ**	**PS**	**PM**	**PL**
PM: Positive MEDIUM	PM	**PL**	**PM**	**PS**	**PS**	**PS**	**PM**	**PL**
PL: Positive LARGE	PL	**PL**	**PM**	**PS**	**PS**	**PS**	**PM**	**PL**

4. Simulation results

By using the block diagram in figure 4, a simulink model has been designed in MATLAB Simulink environment to show the performance of the proposed strategy. The simulation was performed under the same conditions and using the same settings for DTC and DTFC.

Figures 7 and 8 shows the simulation results of the DTFC compared to those obtained by the conventional DTC. For the DTFC, the rotation speed has achieve the reference value with a small overshoot. It stabilizes at a constant value equal to that of the reference (1000 rpm) with a response time relatively small. An expansion in the current during the established regime makes it possible to show an improvement in the stator current form. In fact, the current distortion is strongly reduced. It is one of the major factors that distinguishes the DTFC of the DTC. For the electromagnetic torque, an increase in oscillatory up to a maximum value of 38.3 N. m, then it descends almost instantly to its reference value of 10 N. m with a ripple of 0.3 N.m. We can observe a considerable reduction in the torque ripple. The stator flux immediately reached its reference value of 1.2 Wb with a slight ripple of 0.008 Wb around the reference value. One can see a very significant reduction in the ripple stator flux. The trajectory of the stator flux takes on a circular shape with a radius equal to 1.2 Wb. We can observe a form perfectly circular in the path of the stator flux. Comparing the two methods (DTFC, classical DTC), the DTFC is characterized by :

- A considerable reduction of the torque ripple
- A considerable reduction of the stator flux ripple.
- A reduction of the current distortion by the use of the SVM-PWM inverter.

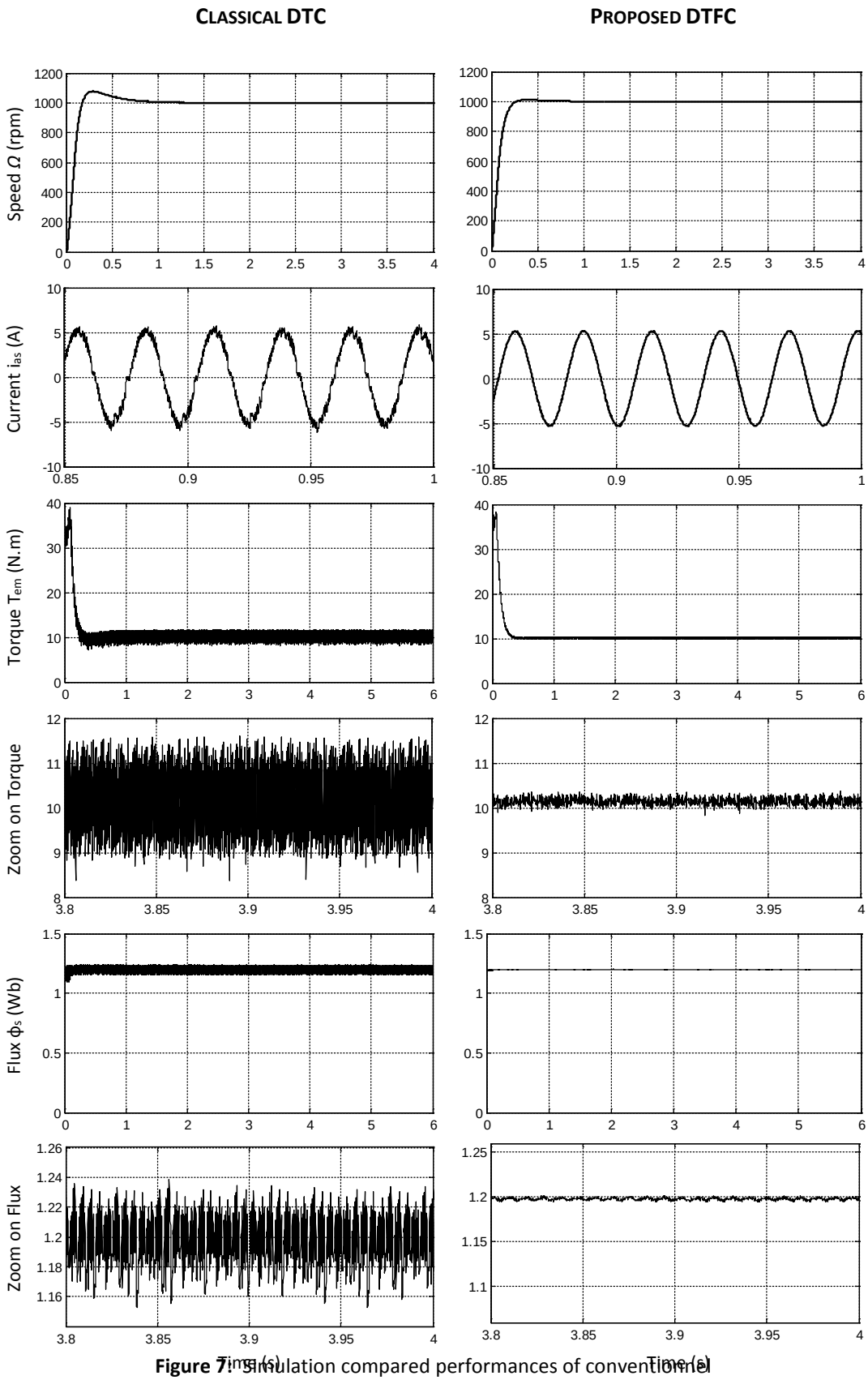

Figure 7: Simulation compared performances of conventional DTC and proposed DTFC

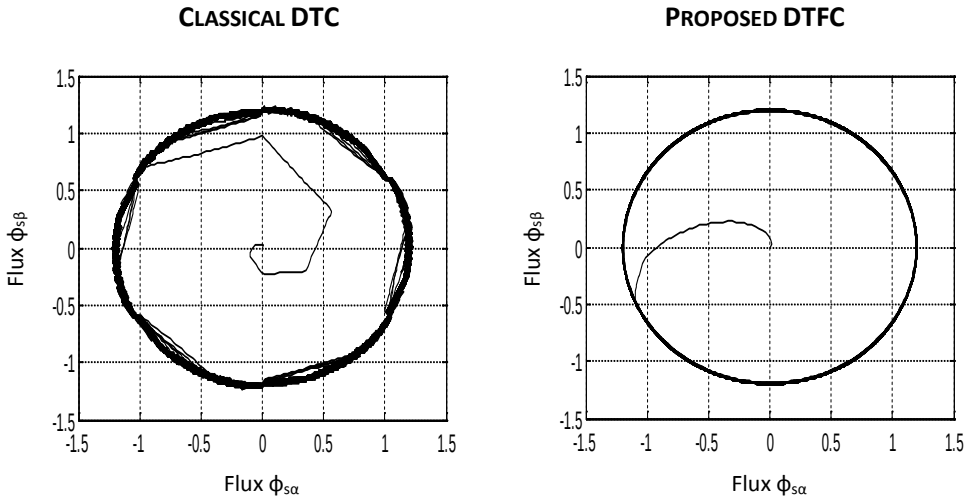

Figure 8: Compared flux tragectory

Table 4: Induction machine parameters.

2 pairs of poles, 50Hz	Rs =4.85Ω	Ls = 274 mH
220/380 V, 6.4/3.7 A	Rr =3.805Ω	Lr = 274 mH
2 hp , 1420 rpm	Lm = 258 mH	
J =0.031 kgm2	f =0.00114 Nms	

CONCLUSION

In this paper a direct torque fuzzy controlled induction motor drive is presented. This control scheme uses artificial intelligent controllers based on fuzzy inference systems in order to eliminate the hysteresis comparators and the selection table (used in conventional DTC). The two proposed controllers uses the electromagnetic torque and stator flux errors to act on both the amplitude and the angle of the desired reference voltage. This vector is used by a space vector modulator to generate the inverter switching states. The simulation shows that the proposed direct torque fuzzy control has better performances than those obtained by the DTC. We note a significant reduction of the overshoot at startup, as well as a significant attenuation of the ripples of both torque and flux, the current seems to be sinusoidal without the slightest ripple in permanent regime. In conclusion, it has justified by simulation the improvement of closed loop speed control based on DTC and fuzzy logic systems.

References

[1] A. Miloudi, E. A. Al Radadi, A. Draou, Y. Miloud, "A Variable Gain PI Controller Used for Speed Control of a Direct Torque Neuro Fuzzy Controlled Induction Machine Drive", Turk J Elec Engin, VOL.15, NO.1 2007, pp. 37-49.

[2] D. Casadei, G. Grandi, G. Serra, "Study and implementation of a simplified and efficient digital vector controller for induction motors," in Proc. EMD'9 3, Oxford, U.K., Sept. 8-10, 1993, pp. 196-201.

[3] I. Boldea, S. A. Nasar, "Torque vector control (TVC)–A class of fast and robust torque speed and position digital controller for electric drives," in Proc. EMPS, vol. 15, 1988, pp. 135-148.

[4] L . BAGHLI, "Contribution to Induction Machine Control, Using Fuzzy logic, Neurel Network and Genitic Algorithms", Ph'D Thesis, Université Henri Poincaré University, Frensh, 1999.

[5] M. Depenbrok, "Direct self-control (DSC) of inverter fed induction machine," IEEE Trans. Power Electron., vol. PE-3, pp. 420–429, Oct. 1988.

[6] M. Nour, "Direct Torque Fuzzy Control of Induction Machine", Magister Thesis, National Polytechnical School of Oran, Algeria, 2007.

[7] M. P. Kazmierko wski, H. Tunia, Automatic Control of Converter-Fed Drives. Amsterdam, The Netherlands: Elsevier, 1994.

[8] P. Tiitinen, P. Pohkalainen, J. Lalu, "The next generation motor control method: Direct torque control (DTC)," EPE J., vol. 5, pp. 14‑18, Mar. 1995.

[9] P. Vas, Sensorless Vector and Direct Torque Control. Oxford, U.K.: Oxford Univ. Press, 1998.

[10] T. G. Hableter, F. Profumo, M. Pastorelli, L. M. Tolbert, "Direct torque control of induction machines using space vector modulation," IEEE Trans. Ind. Applicat., vol. 28, pp. 1045‑1053, Sept./Oct. 1992.

[11] Takahashi, T. Noguchi, "A new quick response and high efficiency control strategy of an induction motor," IEEE Trans. Ind. Applicat., vol. IA-22, pp. 820–827, Sept./Oct. 1986.

Author(s)

Mr. Mohamed Nour Received his MSc degree in Electrical Engineering from National Polytechnical School of Oran, Algeria, 2007. He worked for Sonatrach Algerian petroleum company as maintenance electrical engeneer from 2009 to 2015, a member of Smart Grid renewable energy laboratory at Tahri Mohamed University of Bechar, Algeria, he prepars his PH'D thesis in electrical engennering at the same university, actually he works as laboratory electrical engeneer for Nour El Bachir university center, El Bayadh, Algeria.

Email: nour_enset@yahoo.fr
Phone Number: (+213)671045245

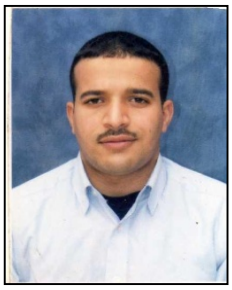

Mr. Tedjini Hamza Received the M.Sc. degree from the university of Ibn Khaldoun –Tiaret- Algeria in 2007, and the Ph.D. degree the University of Sciences and Technology Mohammed Boudhiaf of Oran (USTO-MB) in 2012. Actually he is a professor of electrical engeneering in Mohammed Tahri university, Bechar, Algeria.

Email: tedjini_h@yahoo.fr
Phone Number: (+213)775499167