Vol. 7(25), Jul. 2017, PP. 3488-3498

Contents list available at IJMEC

International Journal of Mechatronics, Electrical and Computer Technology (IJMEC)

Journal Homepage: www.aeuso.org

PISSN: 2411-6173 - EISSN: 2305-0543

Design and Simulation of Solar Power Plant with Fuzzy MPPT and Fully Sinusoidal Current by Multilevel Hysteresis Controller

Mohammad Cheshfar*, Zahra Mokhtari, Zhale Amirjamshidi, Zeinolabedin Moussavi, Parviz Amiri

Shahid Rajaee Teacher Training University, Tehran, Iran

Phone Number: +98-22970060

***Corresponding Author's E-mail:** m.cheshfar@srttu.edu*

Abstract

Hysteresis modulation has a very wide application for the power inverters. This application is arising from the very fast dynamic response and the reference capability of the high frequency range. On the other hand, the maximum power point tracking causes to increase the received power without need to replace the solar array. Also utilizing the multilevel cascaded H-bridge inverter, several PV arrays can be connected together as motivate to increase the power quality and reduce the switching frequency and the filter size. In this paper, the multilevel and improved hysteresis control methods are simulated and compared. The results of the two methods express increasing the main component of the current and reducing THD in the improved method. Then general simulation of the solar power plant connected to the DC/DC SEPIC converter with maximum power point tracking capability by Fuzzy algorithm and the five-level cascaded H-bridge inverter with fully sinusoidal output and controlled by the multilevel improved hysteresis method is presented.

Keywords: *power converter, multilevel inverter, hysteresis control, Fuzzy control, MPPT.*

1. Introduction

In recent years, the use of renewable energy sources as an appropriate replace for fossil fuels to produce electricity is considered by researchers. Increasing the efficiency of the solar panels is one of the proposed issues, that is considered and the different solutions are expressed to improve this efficiency. One of the methods is the maximum power point tracking (MPPT). For load with internal resistance R_i, optimization only occurs at a certain point which is called the maximum power point (MPP) [4]. For this tracking, the proper controller is needed [13] as perturb and observe (P&O), incremental conductance algorithms, constant voltage, model predictive control (MPC), artificial neural networks (ANN), fuzzy and etc. [2]. Through these control methods, the fuzzy method is considered for working with imprecise and known inputs and the ease of design [14]. In order to use productivity power of the solar plant, the SEPIC converter needs to connect to the load, by the inverter for changing the DC voltage to the AC. The traditional inverters have two AC voltage levels, zero and one, positive (or negative) value in the output. As well as for having the current and high quality voltage at the output, high switching frequency is required [8]. In high power, acceding to the fast dynamics causes to reduce the switching frequency. For this reason, direct current feedback is used. In this method, the current is compared with the reference value by a hysteresis comparator until the required pulse is provided for the switching [6, 1]. To adjust the output current, the multilevel hysteresis control is used. This control method is included

Article History:
Received Date: Mar. 03, 2016
Accepted Date: Apr. 23, 2017
Available Online: Jul. 01, 2017

the transistors switching of the inverter so that the load current follows the reference in the certain hysteresis bands.

The aim of this paper is, designing and simulating the solar plant that is used the DC-DC SEPIC converter to achieve the maximum power point by fuzzy logic. Also for converting the DC voltage of the converter into the AC voltage, a five-level controlled inverter is used by the five-band hysteresis.

In this paper, at first the DC/DC SEPIC converter is studied, then the fuzzy controller is expressed. The more the five-level inverter and the multi-band hysteresis controller and the improved method is studied and compared. Next the general simulation of a solar plant is presented and finally, the achieved results are reviewed.

2. SEPIC CONVERTER

SEPIC converter is a DC-DC converter which is similar to the Buck-Boost converter. The SEPIC output voltage can be greater than, less than or equal to input voltage, which is controlled by duty cycle of the transistor. In Figure 1, the schematic of the SEPIC converter is shown [7].

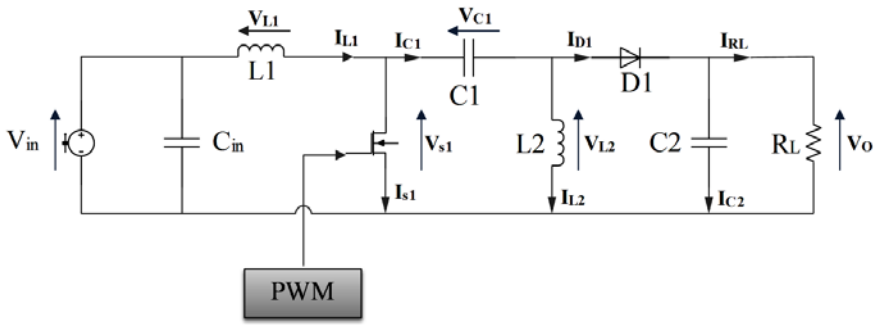

Figure 1: schematic of SEPIC converter.

I and *V* values can be calculated by the SEPIC converter equations, using the calculated duty cycle in (1, 2) [15].

$$V_S = \frac{D}{1-D} V_O \tag{1}$$

$$I_S = \frac{D}{1-D} I_O \tag{2}$$

Where V_o and Io are the output voltage and current, Vs and Is are the input voltage and current, and D is the duty cycle.

Fuzzy logic

Fuzzy logic is a control method which uses the membership functions and rule table relying on knowledge of expert to determine the next operating point. The flow chart of fuzzy algorithm is shown in Figure 2.

Fuzzy logic is a multi-valued logic which is based on fuzzy set theory that is defined by membership functions. In this paper Membership functions of the fuzzy algorithm include two inputs and one output. Temperature and irradiation of the sun are considered as inputs and optimized duty cycle as output, which are defined in four ranges Small, Means, Large and Very Large. The membership degree is expressed using the (3-5).

Irradiation (G) variation are intended in a range between [0 1300] [5].

$$\mu_{Ai}(X_{oi}) = \begin{cases} 1 - \dfrac{|X - X_{oi}|}{\varepsilon_{X_{oi}}} & if\ |X - X_{oi}| \prec \varepsilon_{X_{oi}} \\ 0, otherwise \end{cases} \tag{3}$$

$\mu_{Ai}(X_{oi})$ is the membership degree of the irradiation function at specified point X_{oi} .The temperature (T) range is between [10 52] [5].

$$\mu_{Bj}(Y_{oj}) = \begin{cases} 1 - \dfrac{|Y - Y_{oj}|}{\varepsilon_{Y_{oj}}} & if\ |Y - Y_{oj}| \prec \varepsilon_{Y_{oj}} \\ 0, otherwise \end{cases} \tag{4}$$

$\mu_{Bj}(Y_{oj})$ is the membership degree of the temperature function at specified point Y_{oj}.

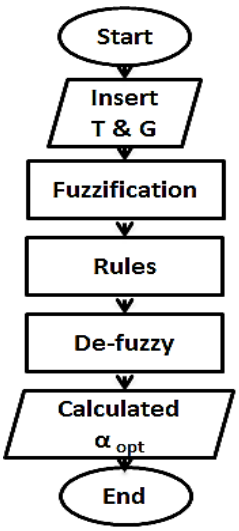

Figure 2: Flow chart of fuzzy algorithm.

The optimized duty cycle (α_{opt}) varies in the range between [0.3 0.55] [5].

$$\mu_{Ck}(Z_{ok}) = \begin{cases} 1 - \dfrac{|Z - Z_{ok}|}{\varepsilon_{Z_{ok}}} & if\ |Z - Z_{ok}| \prec \varepsilon_{Z_{ok}} \\ 0, otherwise \end{cases} \tag{5}$$

$\mu_{Ck}(Z_{ok})$ is the membership degree of the optimized duty cycle function at specified point Z_{ok}. Membership functions are defined by Using expressed fuzzy logic equations (Figure 3). In this paper, Control rules are extracted from Mamdani method and are presented in Table I [5]. Using the fuzzy membership, a new membership function is gotten. In this case, the duty cycle is calculated then it is put in the equations (1, 2) of SEPIC converter.

Table 1: Control rules by Mamdani

	G(W/m2)			
T(°C)	Small	Means	Large	V-Large
Means	Means	Means	Large	Small
Large	Means	Large	Large	V-Large
V-Large	Small	Means	V-Large	V-Large

The value of I and V are calculated. They are compared with the value that is obtained from the panel then the maximum error is gotten.

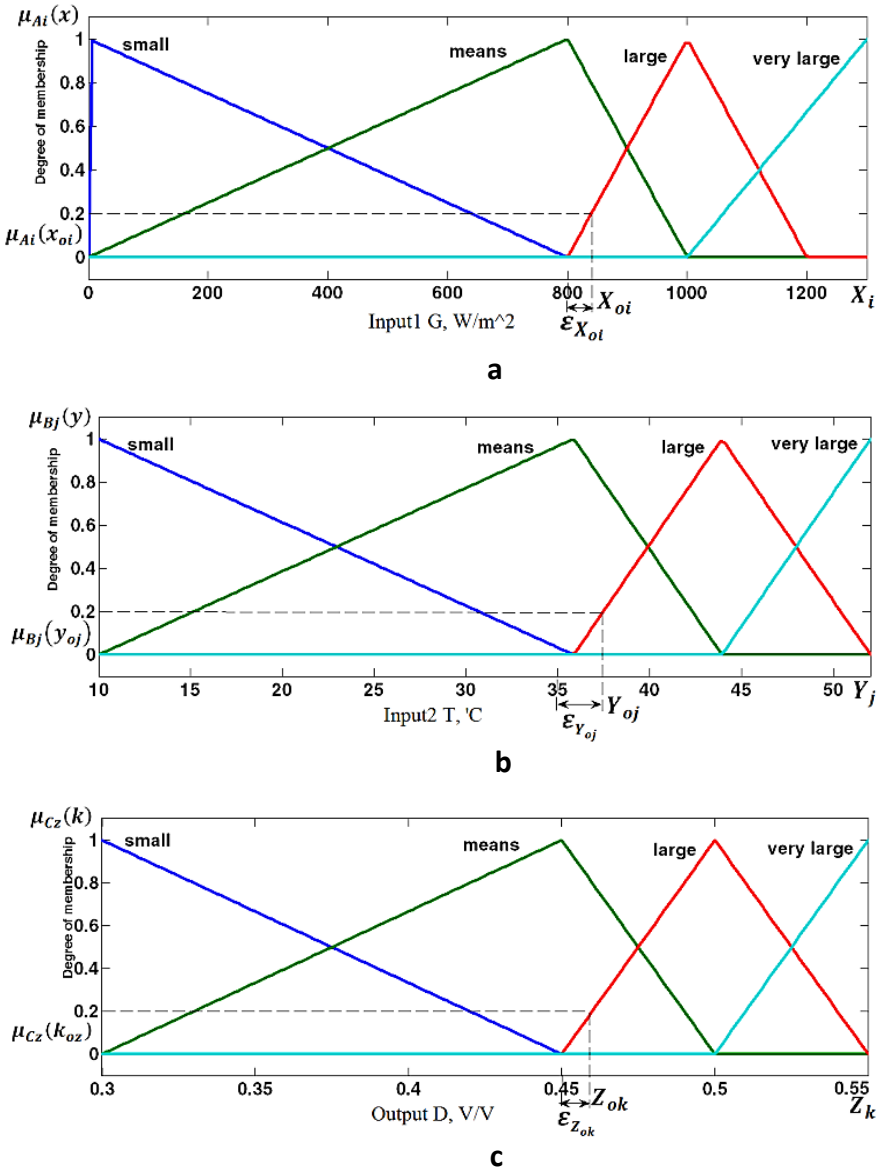

Figure 3: Membership functions: a. irradiation G, b. temperature T, c. optimum duty cycle.

4. Inverter

The inverters, which produce voltage or current with zero and VDC levels, due to there are two levels of the voltage in the output, are called two-level inverters. These inverters require the high switching frequency with different pulse width modulation methods to have the current or voltage output waveform with high quality and low harmonics. The two-level inverters, in the high power and voltage for working in high frequency, have limitations, mainly due to switching losses and rated values of its components.

Multilevel inverters are highly regarded in the high power industry and also new plans have been provided for applying in the reactive power. Making an inverter in high power and voltage by multilevel structure is easier, because in this structure, the voltage stress of the device is controlled. Increasing the voltage levels in the inverter without need to higher nominal values for devices will be caused to increase the rated values of power. The exclusive structure of the multilevel voltage source inverters

allows them to achieve higher voltages with low harmonic without using the transformer or synchronous switching components with series connection. By increasing the voltage levels, the harmonic content of the output voltage waveform is significantly reduced [8].

The overall structure of multilevel inverter is, creating a nearly sinusoidal voltage of the several DC voltage level, usually obtained from the capacitive voltage sources. By increasing the number of levels, the made output waveform has further steps which creates a stepped wave and gets closer to the desired waveform [3].

5. Multilevel cascaded inverter

A multilevel cascaded inverter consists of a series-connected of H-bridge inverter units. General task of the inverter is, making the desired voltage from the separate DC supplies (SDCSs), which can be fuel or solar cells. Figure 4.a shows the basic structure of the cascaded inverter with the SDCSs. The SDCS is connected to an H-bridge inverter. The cascaded inverter unlike the Diode-Clamped inverter or Flying-Capacitor inverter does not require clamper diodes or voltage balancing capacitors.

The phase voltage waveform of the five-level cascaded inverter with four SDCSs is shown in Fig 4.b. Sum of the four inverters outputs produces the phase output voltage, i.e. $v_{an} = v_{a1} + v_{a2} + v_{a3} + v_{a4}$. Each level of the inverter can produce three different output voltage, i.e. $+V_{DC}$, zero, and $-V_{DC}$ by connecting to the DC supply that the combination of the four keys S_1, S_2, S_3, and S_4 does this work. For example, turning S_1 and S_4 on lead to $v_{a4}=+V_{DC}$. The result of turning S_2 and S_3 on, is $v_{a4}=-V_{DC}$. If all keys are off, $v_{a4}=0$.

The ac output voltage at each level can be achieved by this way. If N_S is the number of DC supply, the level of the output voltage phase is m= N_S+1. Therefore, a five-level cascaded inverter need to the four SDCSs and four full-wave bridges. By controlling the conduction angles at the different levels of the inverter, the output voltage harmonic distortion can be minimized.

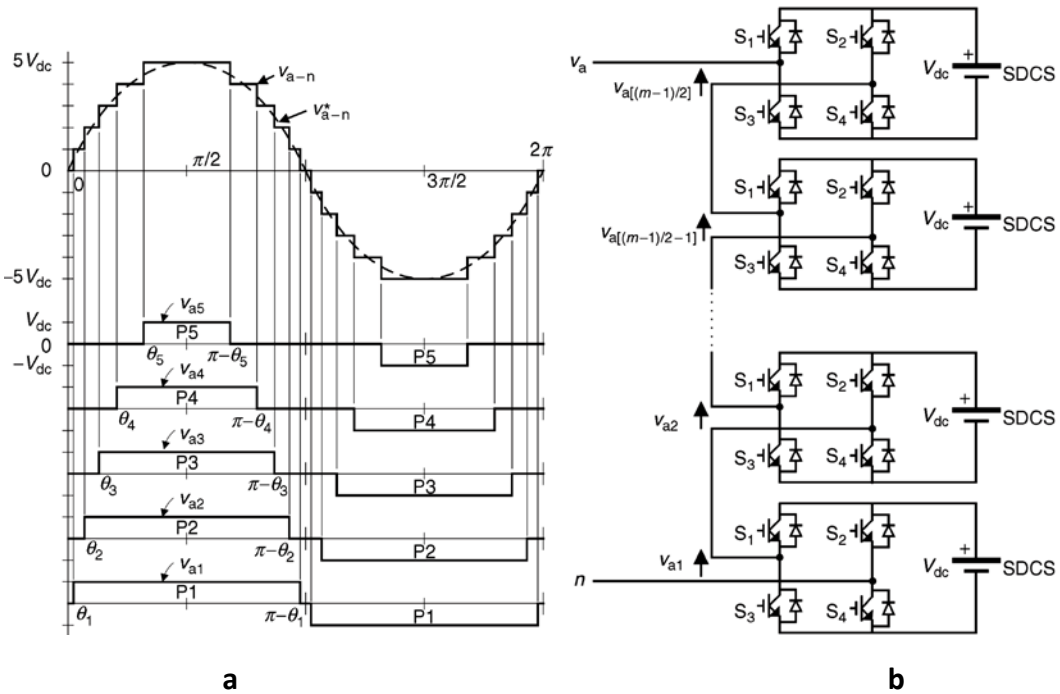

Figure 4: Multilevel cascaded H-bridge inverter a) Single-phase structure b) Output phase voltage waveform.

6. Hysteresis control

Hysteresis band control is based on the real-time control of the current feedback by the pulse width modulation method that the actual current continuously follows the reference current with a

hysteresis band. The actual current wave is forced to follow the sinusoidal current wave with a hysteresis band by the Bang Bang (push-pull) switching of the up and down keys. Inverter essentially changes to a current source with the peak to peak current ripple, which regardless of V_d changes is controlled within the hysteresis band [9-12].

Hysteresis band modulation, due to the simple implementation, fast transient response, directly limiting the maximum current of device, and practical insensitivity to the ripple of the DC line voltage that leads to a smaller filter capacitor, is propagated in the industry.

When only two DC level is available, hysteresis two-level control with each hysteresis range is comparatively easy. But for multilevel inverters, which the number of the output voltage levels are more, task of the control system is, choosing the appropriate levels of the output so that the control variables at specific time intervals do not exceed certain limit. Hence, multilevel hysteresis modulator (MHM) requires the additional logic to select the appropriate voltage level at any instant of the time for limiting the control signals at specific hysteresis band.

The starting point for the design of the appropriate multilevel hysteresis modulator could be the following: Considering the instantaneous value of the controlled system variable, the controller must choose a suitable voltage level. At any instant, when variable exceeds the hysteresis limit, the next higher (or lower) voltage level should be selected in such a way to hold the control variable in the specified limits. However, this new voltage level inverter should not return the variable to the special limits. When this happens, the inverter must be switched to the higher (or lower) voltage level, and the process continues until the proper voltage level is not selected.

To implement the five-band hysteresis control, three bands of amplitude 2δ must be created and centered on the current reference (Figure 5.a). The Current-time surface is divided into five regions as many as the output voltage levels. Depending on the region of the load current, the inverter must feed the load with the suitable voltage level as illustrated in Figure 5 [9]. However, the appropriate hysteresis band should be created and centered on the borders of different bands of amplitude 2δ in order to avoid the infinite switching frequency. In Figure 5, the simulation results for a large value of δ are shown for further comprehension about control strategy. This switching method can be improved and the optimized switching is added to it.

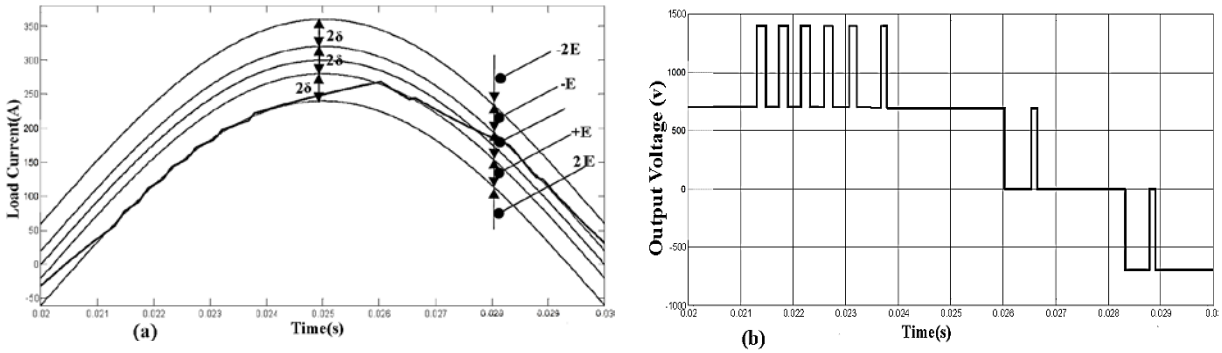

Figure 5: Output current and voltage in multilevel modulation.

The average error in this approach is zero only if the main period is considered. Therefore, this control method does not change the total harmonic distortion but reduces the main harmonic component. This problem can be acute when the voltage level gets more than five levels. This may cause a significant phase lag between the current load and its reference as shown in Figure 5.a and act like selecting the large δ.

The solution of this problem is the creation of a dummy current reference, as shown in Figure 11. Can be observed from Figure 5, that in fact, the load current follows dashed line exhibitor $I_{ref}+m\delta$ (m= ±1, ±3). If the load current follows the actual reference, the current error is reduced and the propounded problem will be solved.

Hence, a dummy reference will be created as $I^d_{ref}=I_{ref} - m\delta$, so that the current reference always follows the desired current according to (6) [9].

$$I^d_{ref} + m\delta = I_{ref} - m\delta + m\delta = I_{ref} \tag{6}$$

The right value of m is easily recognizable. When the load current continually intersects the curve $I_{ref} + m\delta$, a continuous switching only occurs for a logic variables xi with the bi-vocal correspondence i↔m. The scheme of Figure 11 shows a method for using the xi continuous switching to determine the value of m. Then the dummy reference is made properly and the effective solution is expressed for the propounded problem. The expressed method is tested in simulation section.

Simulation

In this section, Matlab software is using to simulation of solar power plants as well as Figure 6. The simulation includes solar array blocks; dc-dc converter and multilevel inverter. As shown in Figure 6 is characterized by the use of H-bridge inverter for five consecutive superficial needs to use 2 arrays. Each of them is connected to a DC/DC SEPIC converter. As mentioned earlier, this method of connecting solar array switches will lead to lower ratings.

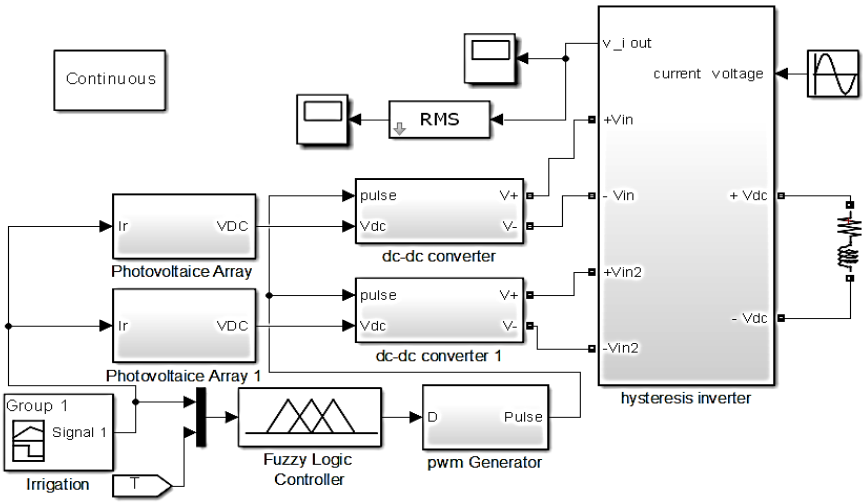

Figure 6: Simulation of solar plant.

The Figure 7 showed the solar array that simulated in Simulink environment that for irradiation, voltage and temperature are determined. Figure 7 showed the simulated of the solar plant. The converter control method, temperature and irradiation were the inputs of the maximum power point. The value for specific temperature and brightness can be obtained from the fuzzy controller. This value is turned to a pulse and applied MOSFET gate through PWM Generator. In Figure 8, SEPIC converter output voltage and duty cycle can be seen for irradiation variations from 700 to 600.

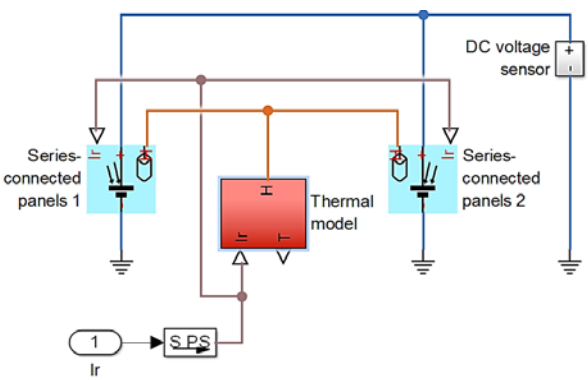

Figure 7: **Simulated solar array.**

The output voltage of the converter is applied to the five levels inverter SEPIC to produce the alternating voltage. The hysteresis controller gets Feedback the load current and compares it with the reference.The comparison is provided pulses by hysteresis bands that required to switches of inverter till pursuing the Output current reference. Figure 9 is showed a block diagram of the control method implemented in the simulation.

Figure 10 respectively is shown the current, the voltage, and the error if the current and the output voltage of the five-level inverter that is controlled by a multi-offset band controller.

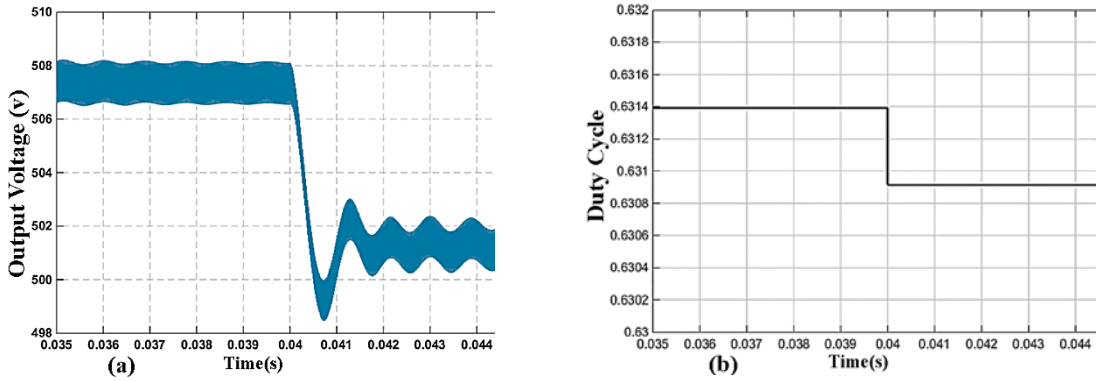

Figure 8: (a) Output voltage of converter (b) Duty cycle by changing the temperature and irradiance.

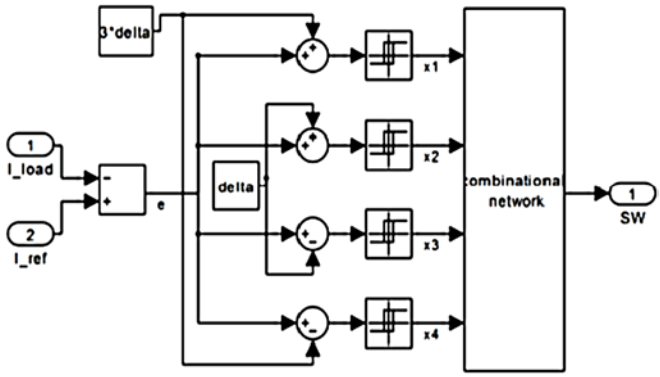

Figure 9: Implementation of multilevel controller.

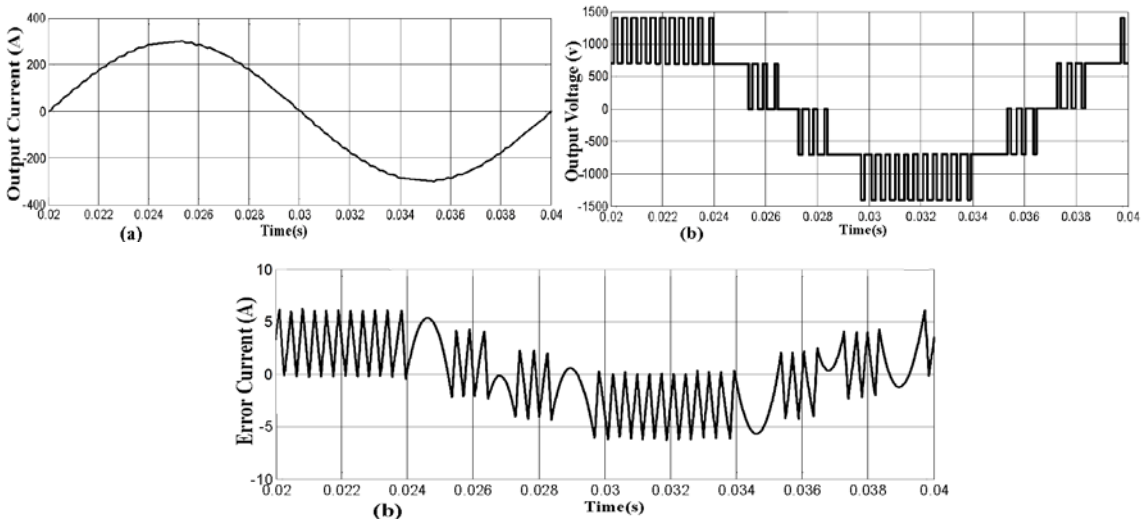

Figure 10: Waveform achieved by multilevel inverter.

As described, the disadvantage of this method is created an output offset error that is reducing the main component of current. To compensate for this error, circuit that is shown in Figure 11, dummy reference circuit, has been implemented in the Simulink environment.By adding this block to block hysteresis controller, improved controller is obtained.So that it can be seen in Figure 12, before 6.39 milliseconds (starting time as it seen in Figure 12.a) there is a continuous switching between 0 and + E. This continuous switching is resulted by variable x3. The modification current reference circuit is achieved by using the circuit Figure 11 mδ = -1A (m = -1, δ = 1A). The modification current reference is shown in Figure 13.b.

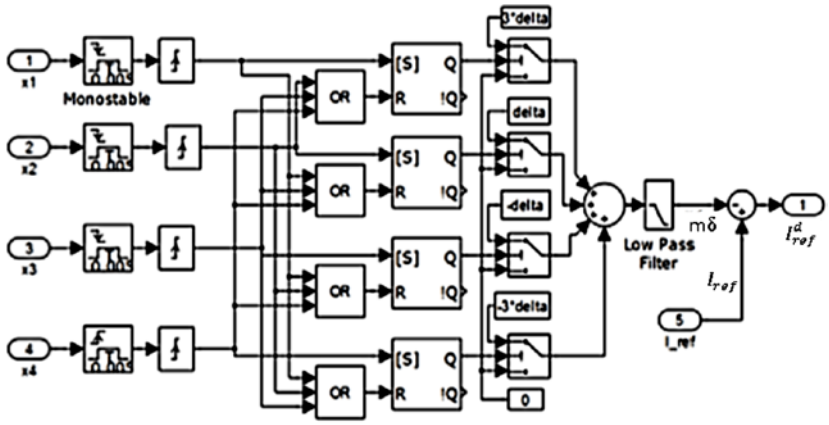

Figure 11: Dummy current reference producer circuit.

So this way can be seen, at the moment of 6.39 milliseconds, one continuous switching is started between + E and + 2e. As a result, the current should follow Irf-3δ without reform. But continuous switching by x4 is caused the amount of mδ is detected and the appropriate dummy reference as it seen in Figure 12.a is created. As a result, the current of load will follow Iref-3δ. The output voltage and multilevel inverter current error that is controlled by improved method can be seen in Figure 12.c, d.

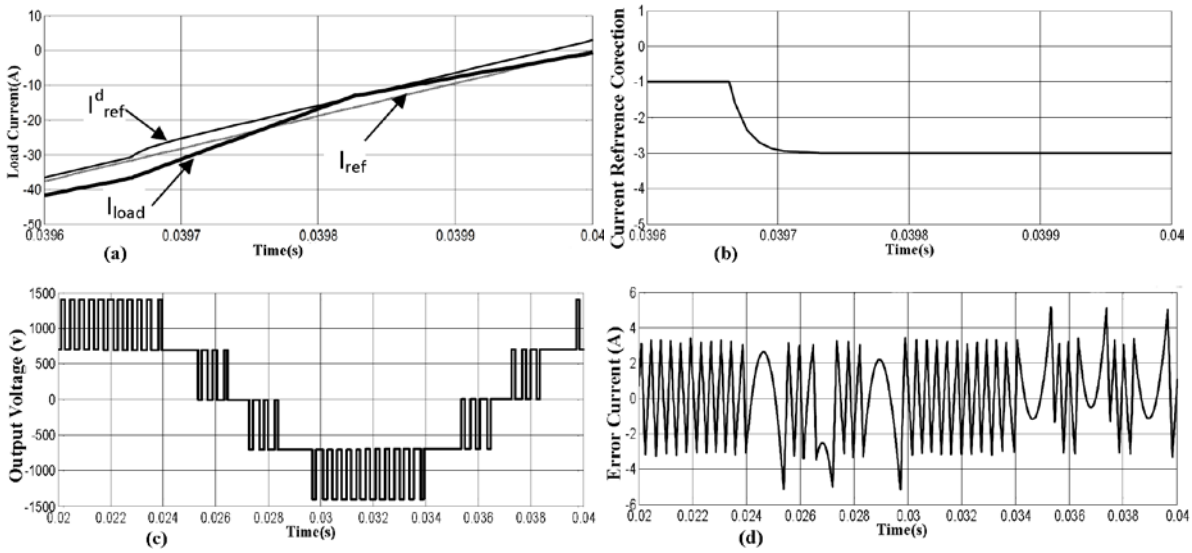

Figure 12: Achieved waveform of multilevel improved hysteresis modulation.

As the simulation results are observed, Fuzzy logic controller according to the temperature and irradiation of the panel is applied the suitable pulses to the SEPIC converter to control the maximum power point. Multilevel inverter is converted the dc voltage to ac voltage. The simulations were performed with current reference 300A.The main component of a multilevel output current and improved method is obtained 300.5A and 298A, respectively. This increase of the main components is reduced the THD from 1.8% to 1.6%.

CONCLUSION

In this paper, multilevel hysteresis controller and improved multilevel hysteresis controller have been analyzed for use in solar power plants. The advantage of both methods is to use an array for each inverter bridge, the advantage is reduced the cost of the inverter by decreasing the levels of voltage. Improved multilevel hysteresis method did not require the Compensation offset. Also in this method, THD is declined by increasing the main components of current.

References

[1] A. Kernick, D. L. Stechschulte, and D. W Shireman, "Static inverter with synchronous output waveform synthesized by time-optima -response feedback," IEEE Trans. IECI, vol. IECI-24, no 4, pp.297-305, Nov 1977.

[2] A. Rooholamini, and R. Fadaenezhad, "Improve the incremental conductance method in order to receive maximum power of photovoltaic generators," 26th international power system conference, 2011.

[3] A. Shukla, A. Ghosh, and A. Joshi, "Hysteresis Modulation of Multilevel Inverters," IEEE Transactions on Power Electronics, Vol. 26, No. 5, 1396-1409, 2011.

[4] C. Larbes, S.M. Aı¨t Cheikh, T. Obeidi, and A. Zerguerras, "Genetic algorithms optimized fuzzy logic control for the maximum power point tracking in photovoltaic system," Renewable Energy 34, 2009.

[5] Ch. Ben Salah, and M. Ouali, "Comparison of fuzzy logic and neural network in maximum power point tracker for PV systems," Electric Power Systems Research 81, 43–50, 2011.

[6] D. M. Brod, and D. W. Novotny, "Current control of VSI-PWM inverters," IEEE Industry Applications Society Annu. Meeting Conf. Rec., Chicago, IL, pp. 418-425, Sept./Oct. 1984.

[7] D. Zhang, "AN-1484 designing a SEPIC converter," Texas Instruments, revised April 2013.

[8] M.H. Rashid, Power Electronics: Circuit, Devices & Application, Pearson, third edition, Khorasan Publications, 2007.

[9] M. Marchesoni, "High Performance Current Control Techniques for Applications to Multilevel High-Power Voltage Source Inverters," IEEE Trans. Power Electron. 7:189–204, 1992.

[10] P. C. Loh, G. H. Bode, and P. C. Tan, "Modular hysteresis current control of hybrid multilevel inverters," in Proc. IEE Electric. Power Appl., vol. 152, pp. 1–8, Jan. 2005.

[11] R. Gupta, A. Ghosh, and A. Joshi, "Switching characterization of cascaded multilevel-inverter-controlled systems," IEEE Trans. Ind. Electron., vol. 55, no. 3, pp. 1047–1058, Mar. 2008.

[12] S.Z. Moussavi, P. Amiri, M. Cheshfar. "Method of Design of Multilevel Inverter based on Hysteresis Current Control", 5th Iranian Conference on Electrical & Electronics Engineering, 2013.

[13] T. Esram, and P. L. Chapman, "Comparison of photovoltaic array maximum power point tracking techniques," IEEE Transactions on Energy Conversion, Vol. 22, No. 2, June 2007.

[14] Z. Mokhtari, Z. Moussavi, and P. Amiri, "Survey of fuzzy method in Maximum Power Point Tracking," 3rd Iranian Conference on Renewable energies and distributed generation, Esfahan, Iran, March 2013.

[15] Z. Mokhtari, Zh. Amirjamshidi, Z. Moussavi, and P. Amiri, "MPPT controller with fuzzy method based on a SEPIC converter," 1th international conference and Exhibition on solar Energy, Tehran, Iran, May 2014.